Cambridge Assessment International Education

Cambridge International AS & A Level

CANDIDATE NAME									
CENTRE NUMBER						CANDIDATE NUMBER				

0123456789

PHYSICS **9702/02**

Paper 2 AS Level Structured Questions **For examination from 2022**

SPECIMEN PAPER **1 hour 15 minutes**

You must answer on the question paper.

No additional materials are needed.

INSTRUCTIONS

- Answer **all** questions.
- Use a black or dark blue pen. You may use an HB pencil for any diagrams or graphs.
- Write your name, centre number and candidate number in the boxes at the top of the page.
- Write your answer to each question in the space provided.
- Do **not** use an erasable pen or correction fluid.
- Do **not** write on any bar codes.
- You may use a calculator.
- You should show all your working and use appropriate units.

INFORMATION

- The total mark for this paper is 60.
- The number of marks for each question or part question is shown in brackets [ ].

This document has **16** pages. Blank pages are indicated.

© UCLES 2019

Data

acceleration of free fall	g	=	$9.81\ \text{m s}^{-2}$
speed of light in free space	c	=	$3.00 \times 10^{8}\ \text{m s}^{-1}$
elementary charge	e	=	$1.60 \times 10^{-19}\ \text{C}$
unified atomic mass unit	1 u	=	$1.66 \times 10^{-27}\ \text{kg}$
rest mass of proton	m_p	=	$1.67 \times 10^{-27}\ \text{kg}$
rest mass of electron	m_e	=	$9.11 \times 10^{-31}\ \text{kg}$
Avogadro constant	N_A	=	$6.02 \times 10^{23}\ \text{mol}^{-1}$
molar gas constant	R	=	$8.31\ \text{J K}^{-1}\ \text{mol}^{-1}$
Boltzmann constant	k	=	$1.38 \times 10^{-23}\ \text{J K}^{-1}$
gravitational constant	G	=	$6.67 \times 10^{-11}\ \text{N m}^2\ \text{kg}^{-2}$
permittivity of free space	ε_0	=	$8.85 \times 10^{-12}\ \text{F m}^{-1}$
	$\left(\frac{1}{4\pi\varepsilon_0}\right.$	=	$\left.8.99 \times 10^{9}\ \text{m F}^{-1}\right)$
Planck constant	h	=	$6.63 \times 10^{-34}\ \text{J s}$
Stefan–Boltzmann constant	σ	=	$5.67 \times 10^{-8}\ \text{W m}^{-2}\ \text{K}^{-4}$

Formulae

uniformly accelerated motion	s	=	$ut + \frac{1}{2}at^2$
	v^2	=	$u^2 + 2as$
hydrostatic pressure	Δp	=	$\rho g \Delta h$
upthrust	F	=	$\rho g V$
Doppler effect for sound waves	f_o	=	$\frac{f_\text{s} v}{v \pm v_\text{s}}$
electric current	I	=	$Anvq$
resistors in series	R	=	$R_1 + R_2 + \ldots$
resistors in parallel	$\frac{1}{R}$	=	$\frac{1}{R_1} + \frac{1}{R_2} + \ldots$

© UCLES 2019

1 The speed v of a transverse wave on a uniform string is given by the expression

$$v = \sqrt{\frac{Tl}{m}}$$

where T is the tension in the string, l is its length and m is its mass.

An experiment is performed to determine the speed v of the wave. The measurements are shown in Table 1.1.

Table 1.1

quantity	measurement	uncertainty
T	1.8 N	± 5%
l	126 cm	± 1%
m	5.1 g	± 2%

(a) Use the data in Table 1.1 to calculate the speed v.

v = ... m s^{-1} [2]

(b) Use your answer in **(a)** and the data in Table 1.1 to calculate the absolute uncertainty in the value of v.

absolute uncertainty = ... m s^{-1} [2]

[Total: 4]

© UCLES 2019

2 **(a)** Define acceleration.

.....

..... [1]

(b) A ball is kicked from horizontal ground towards a vertical wall, as shown in Fig. 2.1.

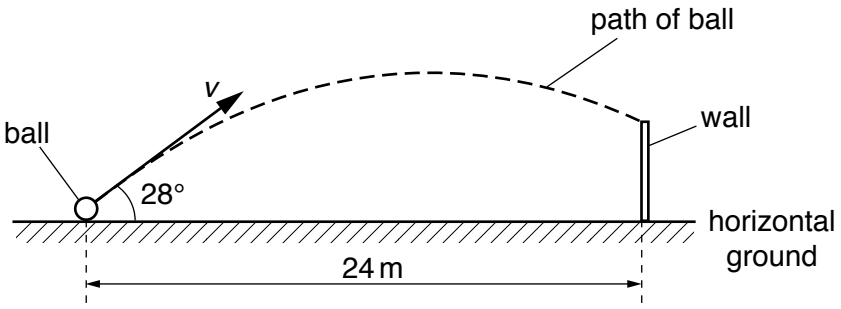

Fig. 2.1 (not to scale)

The horizontal distance between the initial position of the ball and the base of the wall is 24 m. The ball is kicked with an initial velocity v at an angle of 28° to the horizontal. The ball hits the top of the wall after a time of 1.5 s. Air resistance is negligible.

(i) Calculate the initial horizontal component v_X of the velocity of the ball.

v_X = ... $m\,s^{-1}$ [1]

(ii) Show that the initial vertical component v_Y of the velocity of the ball is $8.5\,m\,s^{-1}$.

[2]

(iii) Calculate the time taken for the ball to reach its maximum height above the ground.

time = ... s [2]

© UCLES 2019

(iv) The ball is kicked at time $t = 0$. Assume that the vertical component v_Y of the velocity of the ball is positive in the upwards direction. On Fig. 2.2, sketch the variation with time t of v_Y for the time until the ball hits the wall.

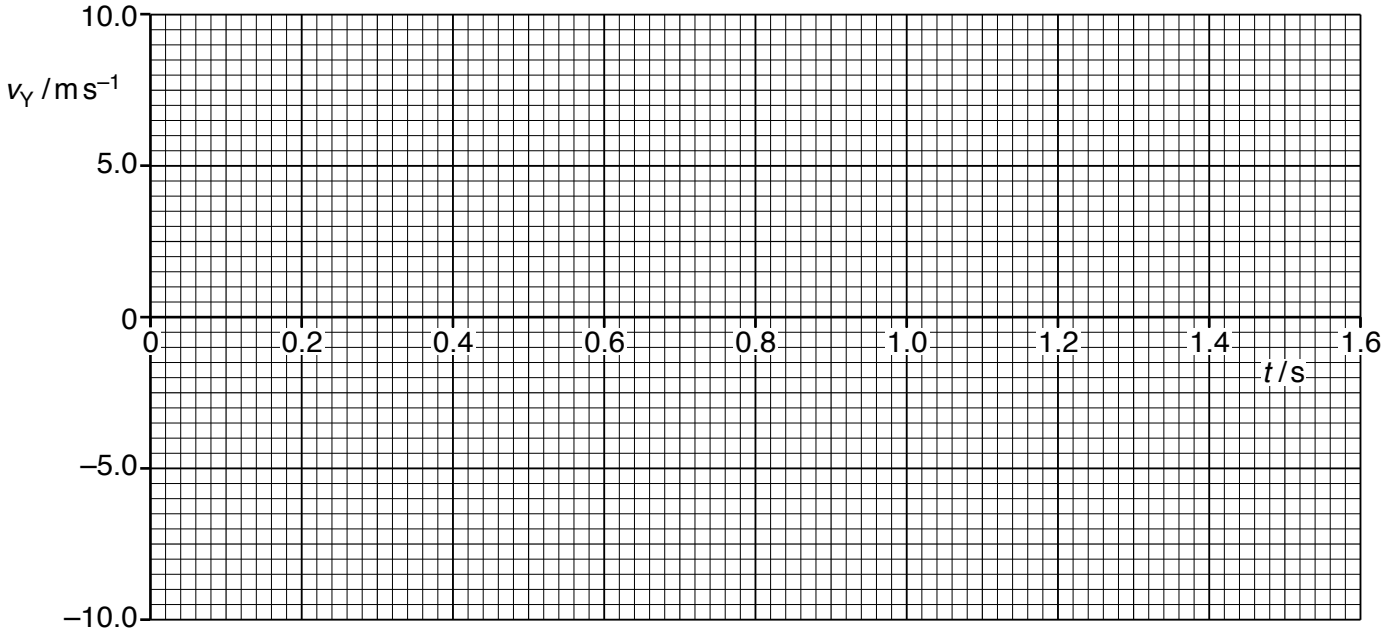

Fig. 2.2 [2]

(c) (i) Calculate the maximum height above the ground of the ball in **(b)**.

maximum height = ... m [2]

(ii) The maximum gravitational potential energy of the ball above the ground is 22 J.

Calculate the mass of the ball.

mass = ... kg [2]

(d) A ball of greater mass is kicked with the same velocity as the ball in **(b)**.
Air resistance is still negligible.

State and explain the effect, if any, of the increased mass on the time taken by the ball to reach its maximum height.

.....

..... [1]

[Total: 13]

© UCLES 2019

3 **(a)** **(i)** Define force.

.....

..... [1]

(ii) State what is meant by work done.

.....

..... [1]

(b) A block of mass 0.40 kg slides in a straight line with a constant speed of 0.30 m s^{-1} along a horizontal surface, as shown in Fig. 3.1.

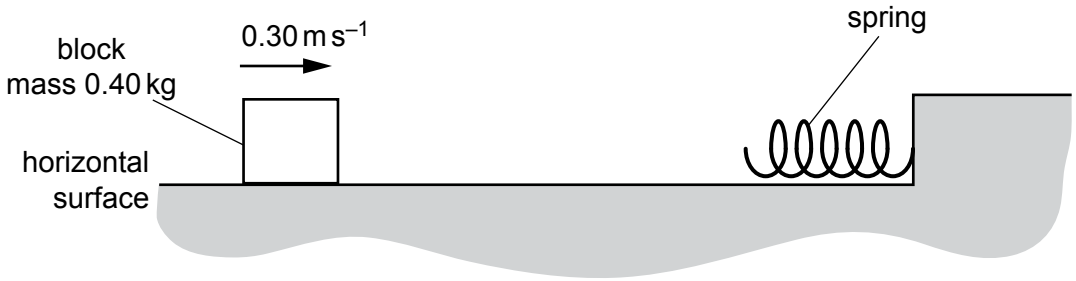

Fig. 3.1

Assume that there are no resistive forces opposing the motion of the block.

The block hits a spring and decelerates. The speed of the block becomes zero when the compression of the spring is 8.0 cm.

(i) Calculate the initial kinetic energy of the block.

kinetic energy = ... J [2]

© UCLES 2019

(ii) The variation of the compression x of the spring with the force F applied to the spring is shown in Fig. 3.2.

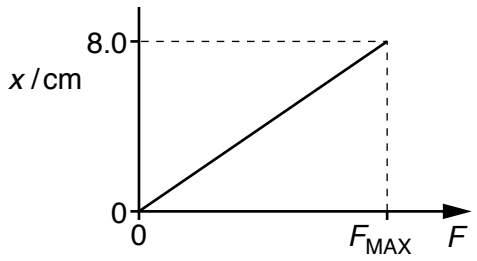

Fig. 3.2

Assume that the elastic potential energy of the spring when its compression is 8.0 cm is equal to the initial kinetic energy of the block.

Use your answer in **(b)(i)** to calculate the maximum force F_{MAX} exerted on the spring by the block.

F_{MAX} = ... N [2]

(iii) Calculate the maximum deceleration of the block.

deceleration = ... $m\,s^{-2}$ [2]

(iv) State and explain whether the block is in equilibrium:

- before it hits the spring

.....

.....

- when its speed becomes zero.

.....

.....
[2]

(v) The block is now replaced by another block of the same mass. Frictional forces affect the motion of this block so that it has a speed of $0.25\,m\,s^{-1}$ when it makes contact with the spring.

A short time later, the block has a speed of $0.15\,m\,s^{-1}$ as it loses contact with the spring and moves back along its original path.

Calculate the magnitude of the change in momentum of the block.

change in momentum = ... N s [2]

[Total: 12]

© UCLES 2019

BLANK PAGE

4 **(a)** **(i)** By reference to the direction of transfer of energy, state what is meant by a transverse wave.

.....

..... [1]

(ii) State the principle of superposition.

.....

.....

..... [2]

(b) Circular water waves are produced by vibrating dippers at points P and Q, as illustrated in Fig. 4.1.

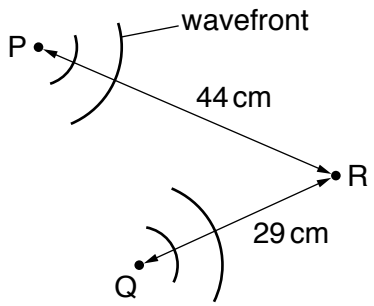

Fig. 4.1 (not to scale)

The waves from P alone have the same amplitude at point R as the waves from Q alone. Distance PR is 44 cm and distance QR is 29 cm.

The dippers vibrate in phase with a period of 1.5 s to produce waves of speed 4.0 cm s^{-1}.

(i) Calculate the wavelength of the waves.

wavelength = ... cm [2]

(ii) Calculate the path difference at point R of the waves from P and Q.
Give your answer in terms of the wavelength λ of the waves.

path difference = ... λ [1]

(iii) Describe the motion, if any, of the water particles at point R.
Explain your answer.

.....

.....

..... [2]

[Total: 8]

5 A beam of vertically polarised monochromatic light is incident on a polarising filter, as shown in Fig. 5.1.

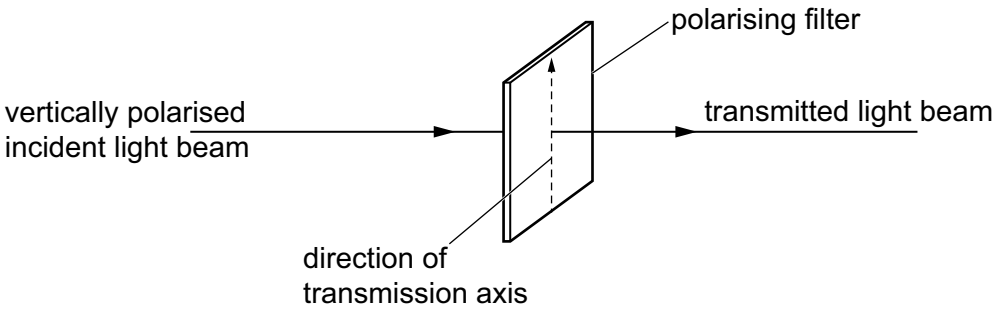

Fig. 5.1

The transmission axis of the filter is initially vertical and the transmitted light beam has the same intensity as the incident light beam.

The filter may be rotated about the direction of the light beam to change the angle of the transmission axis to the vertical.

(a) State one angle of the transmission axis to the vertical that results in no transmitted light beam.

angle = ... ° [1]

(b) The filter is now positioned with its transmission axis at angle θ to the vertical, as shown in Fig. 5.2.

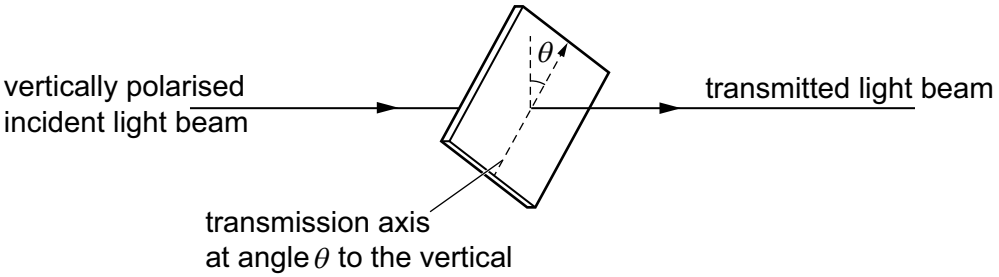

Fig. 5.2

The ratio $\frac{\text{intensity of transmitted light}}{\text{intensity of incident light}}$ is equal to 0.75.

© UCLES 2019

(i) Calculate angle θ.

θ = ... ° [2]

(ii) Calculate the ratio

$$\frac{\text{amplitude of transmitted light}}{\text{amplitude of incident light}}.$$

ratio = ... [2]

[Total: 5]

6 **(a)** Three resistors of resistances R_1, R_2 and R_3 are connected as shown in Fig. 6.1.

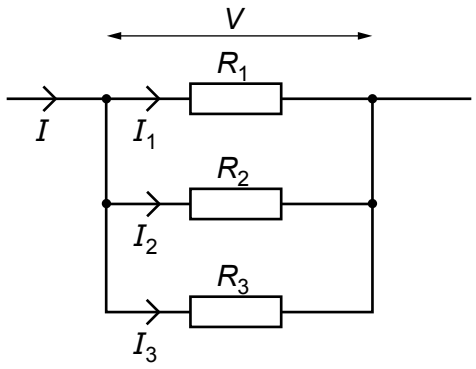

Fig. 6.1

The currents in the resistors are I_1, I_2 and I_3. The total current in the combination of resistors is I and the potential difference across the combination is V.

Show that the total resistance R of the combination is given by the equation

$$\frac{1}{R} = \frac{1}{R_1} + \frac{1}{R_2} + \frac{1}{R_3}.$$

[2]

(b) A battery of electromotive force (e.m.f.) 6.0 V and internal resistance r is connected to an external resistor of resistance 12 Ω and a thermistor X, as shown in Fig. 6.2.

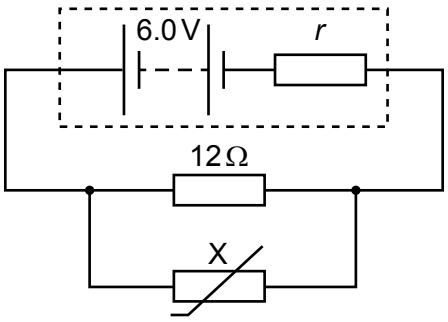

Fig. 6.2

(i) By considering energy, explain why the potential difference across the terminals of the battery is less than the e.m.f.

.....

..... [1]

(ii) A charge of 2.5 kC passes through the battery.

Calculate:

- the total energy transferred by the battery

energy = ... J

- the number of electrons that pass through the battery.

number = ...
[3]

(iii) The combined resistance of the external resistor and thermistor X connected in parallel is 4.8 Ω.

Calculate the resistance of X.

resistance = ... Ω [1]

(iv) Use your answer in **(b)(iii)** to determine the ratio

$$\frac{\text{power dissipated in thermistor X}}{\text{power dissipated in } 12\,\Omega \text{ resistor}}.$$

ratio = ... [2]

(v) The temperature of thermistor X is now decreased.

State and explain the effect, if any, of this temperature change on the total power produced by the battery.

.....

.....

.....

..... [3]
[Total: 12]

© UCLES 2019

[Turn over

7 **(a)** A nucleus X decays by emitting a β^+ particle to form a new nucleus, $^{23}_{11}\text{Na}$.

State the number of protons and the number of neutrons in nucleus X.

number of protons = ...

number of neutrons = ...
[2]

(b) State **one** similarity between a β^+ particle and a β^- particle.

..... [1]

(c) State the quark composition of a meson.

.....

..... [1]

(d) A hadron consists of two down quarks and a charm quark.

Determine the charge of the hadron. Show your working.

charge = ... C [2]

[Total: 6]

Permission to reproduce items where third-party owned material protected by copyright is included has been sought and cleared where possible. Every reasonable effort has been made by the publisher (UCLES) to trace copyright holders, but if any items requiring clearance have unwittingly been included, the publisher will be pleased to make amends at the earliest possible opportunity.

Cambridge Assessment International Education is part of the Cambridge Assessment Group. Cambridge Assessment is the brand name of the University of Cambridge Local Examinations Syndicate (UCLES), which itself is a department of the University of Cambridge.